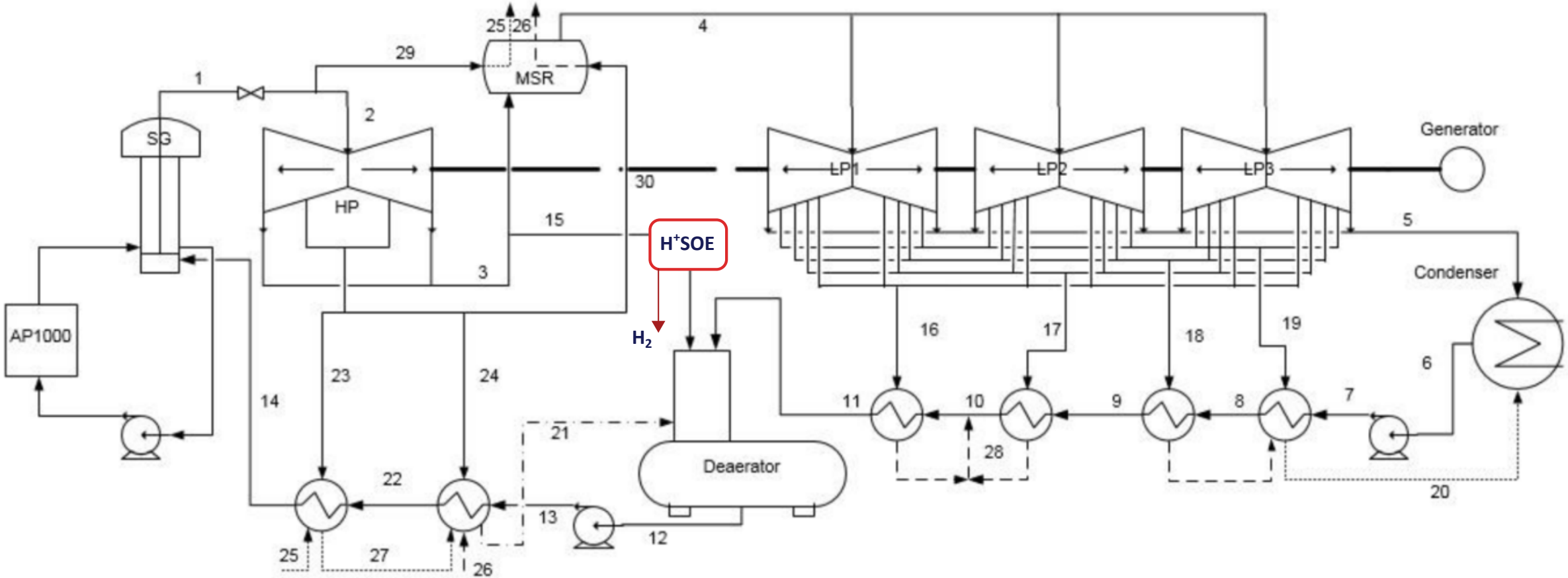
25
26
4
29
MSR
1
2
SG
HP
30
LP1
LP2
LP3
Generator
15
5
H+SOE
3
Condenser
AP1000
H2
16
17
18
19
6
23
24
14
11
10
9
8
7
21
28
Deaerator
22
20
13
12
25
27
26