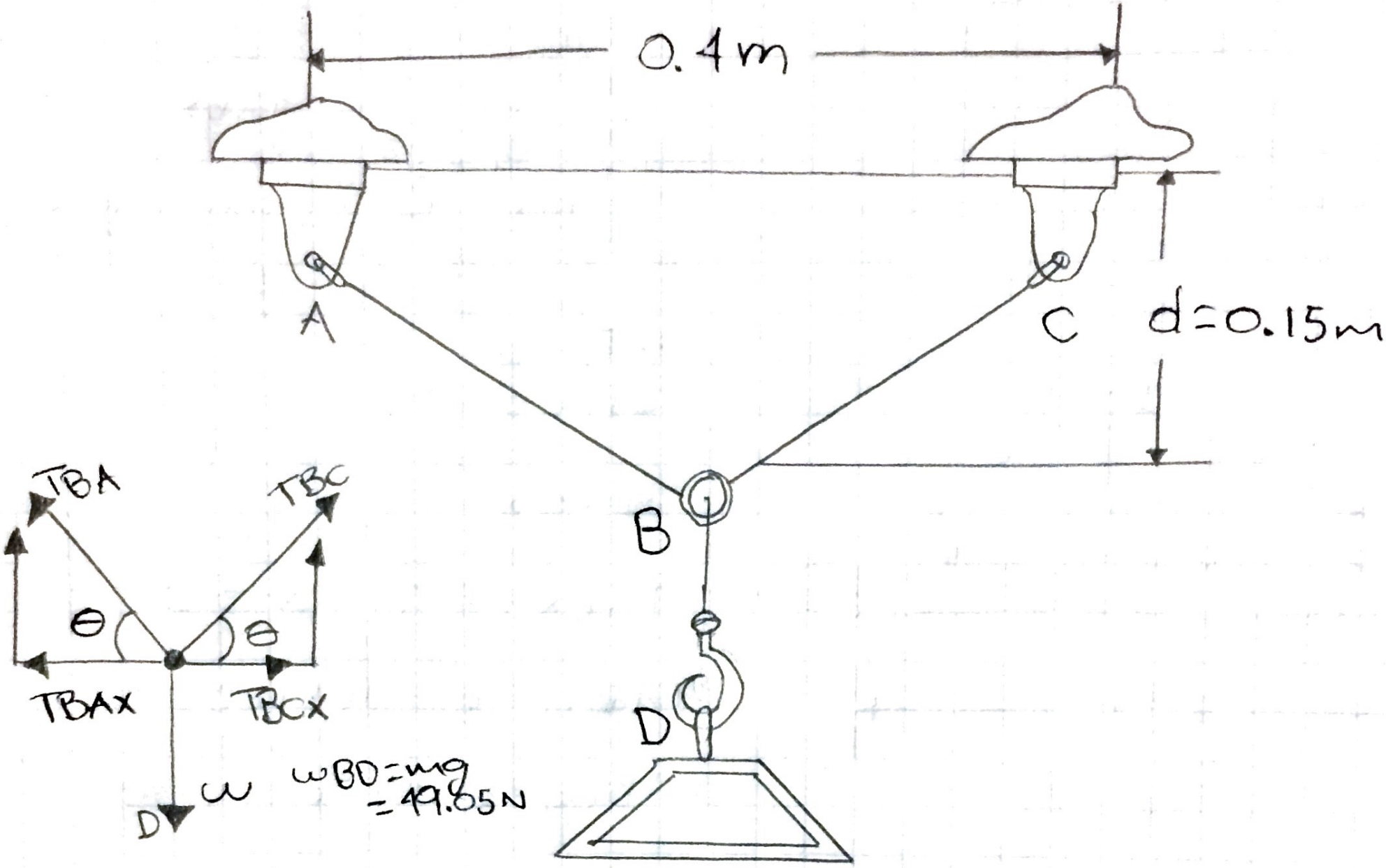
0.4m
A
C
d=0.15m
B
D
TBA
TBC
θ
θ
TBAX
TBCX
w
D
wBD=mg
=49.05N